WORLD WINE BOTTLES & PACKAGING SOLUTIONS
Experience the difference

13

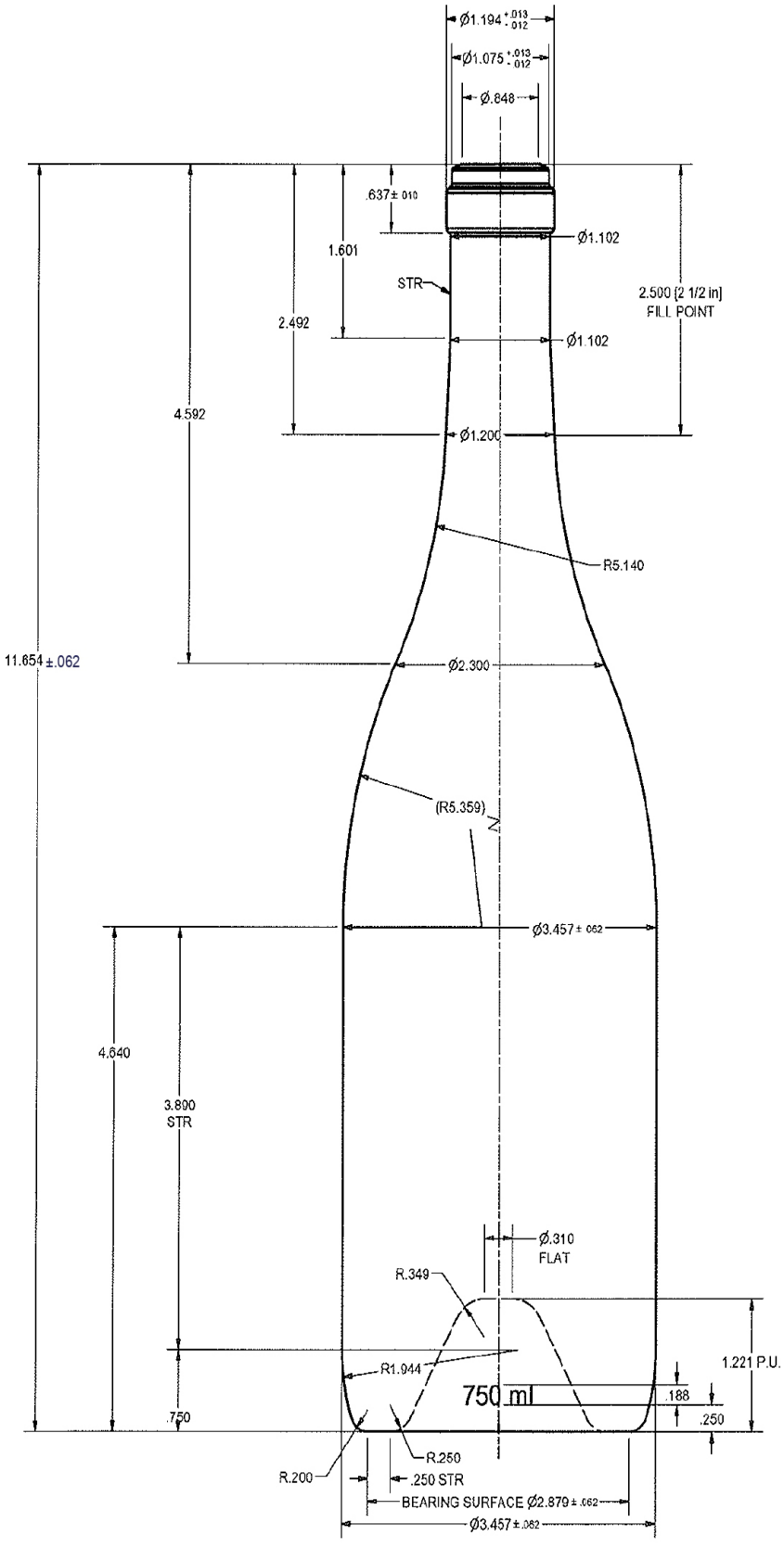

Shape: Burgundy
Size: 750ml
Weight (g): 690
Finish: Cork
Finish (mm): 30
Height (mm): 296
Diameter Base (mm): 87
Diameter Shoulder(mm):87
Punt (mm): 30